Triplex Series

Industrial diaphragm pump
Model: T202F-318S-1P

This document provides technical information relating to this specific Flojet model. General information, references and further resource locations are also included. Triplex industrial pumps are designed to be durable and long-lasting, capable of satisfying pumping needs for a wide variety of applications. Typical pump uses are liquid transfer, spraying, cooling, circulation, filtration and dispensing.

Features

- Robust design with sealed motor
- Long life co-injection mold diaphragm
- Efficient, quiet operation
- Self-priming up to 8 ft. (2.4 m)
- Runs dry without damage

Contents

Pump unit:	Triplex 24V 2GPM S/E 60PSI BP
	Triplex 24V 7.6LPM S/E 4.1BAR BP
Port fittings:	Not included
Strainer:	Not included
IOM:	Included (PN 81000409)
Carton type:	Plain box
Master pack qty.:	6

Dimensional drawing

Inches [mm]

Notes: Additional envelope space required to allow wires to bend, port fittings and hoses, etc.

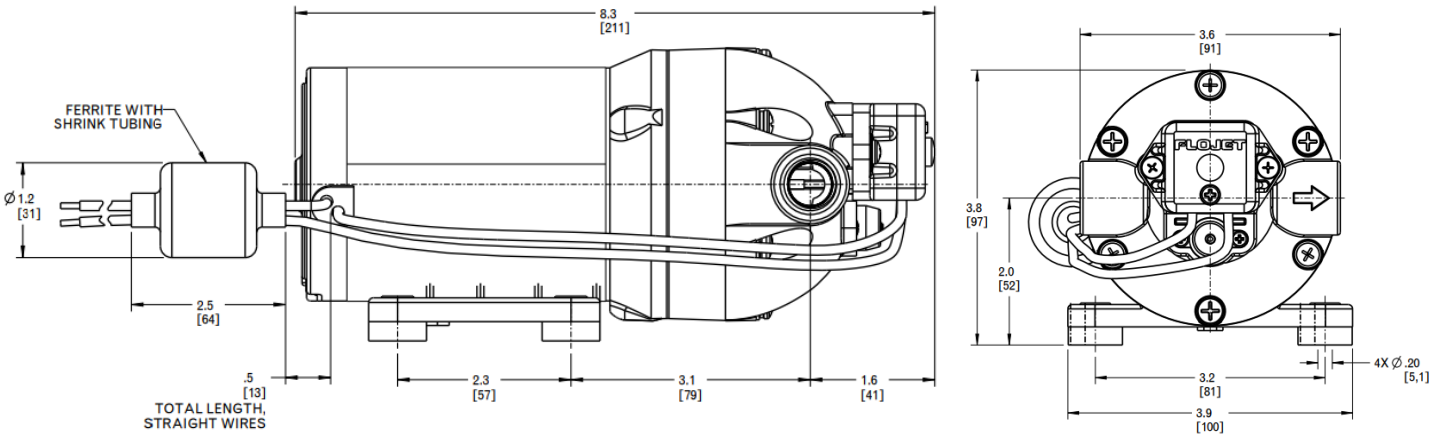

Specifications

General

Part number:	T202F-318S-1P
Aftermarket replacement:	T202F-318S-1P
Replaces:	Duplex Series
Application:	Industrial fluid transfer & spray
Design:	3 chamber diaphragm 3/8" NPTF ports TENV permanent magnet motor Noise dampening baseplate Thermal motor protection (TCO)

Materials (*designates wetted path)

Upper housing*:	Glass-filled polypropylene
Lower housing*:	Cast aluminum
Check valve retainer*:	Polypropylene
Diaphragm*:	Santoprene
Check valves*:	EPDM
Switch diaphragm*:	EPDM
Bypass diaphragm*:	EPDM
PH seals*:	EPDM
PH fasteners:	Stainless steel
Baseplate:	Nylon with rubber feet
Motor casing:	Cast aluminum; coated steel

Hydraulic performance (at nominal voltage)

Open flowrate:	2 GPM open flow (7.6 LPM)
Pressure switch cut-off:	60 PSI (4.1 BAR)
Max operating pressure:	60 PSI (4.1 BAR)
Max inlet pressure:	30 PSI (2.1 BAR)
Internal bypass:	Yes
Fluid temperature range:	40ºF - 140ºF (4ºC - 60ºC)
Self-priming capability:	Up to 8ft (2.4m) dry prime
Run-dry capable:	Yes

Electrical performance (at nominal voltage)

Nominal voltage:	24 VDC
Voltage range:	18 VDC – 27.2 VDC
Max current draw:	4.1 Amps @ 60 PSI (4.1 BAR)
Fuse size:	5 Amps (required)
Duty cycle:	Intermittent (See heat-rise chart)
Leads:	12” (305mm), 14 AWG
Wire connection:	Stripped wire

Compliance

CE:	Yes
UR:	No
RCM:	Yes
UKCA:	Yes
WEEE:	Yes
Country of Origin:	Mexico
HTS Code:	8413.50.0050

Other information

Carton dimensions:	14.25x 6x4.75” (361x152x121 mm)
Master pack dimensions:	20.12x15.25x10.56" (511x387x268mm)
Weight (pump only):	6 lbs (2.7 kg)
UPC code:	705474224364

Flow curve

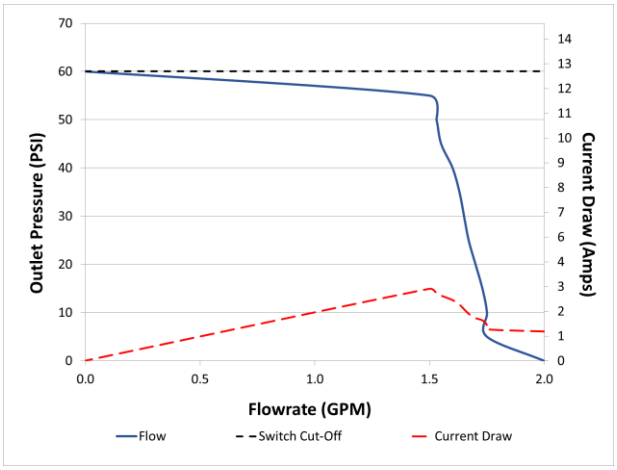

Representative curve of unit operated at nominal voltage. Performance will vary somewhat unit to unit. Flow rate at zero pressure represents Open Bucket.

Temperature rise

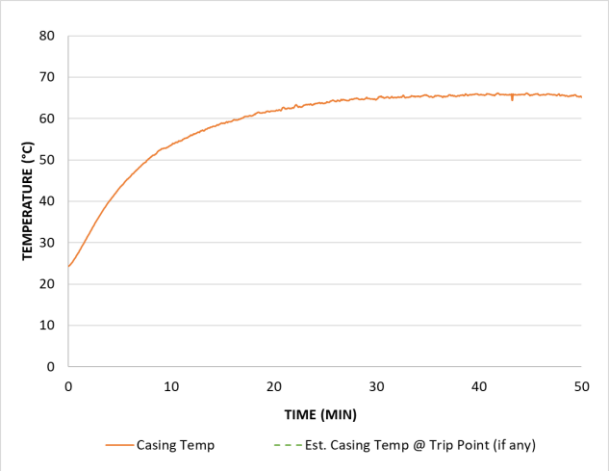

Tested @ ambient temp of 70ºF (21ºC) @ max run pressure. Est. Casing Temp @ Trip Point may vary (+/-10°C). If there is a concern about the ability of the pump to run continuously for long periods of time, then in application testing is highly recommended.

Pump service kits & spares

Item	Description
1. Pressure Switch: 02091060	Pressure switch assembly with wire leads and switch diaphragm
2. Check valve assembly (EPDM): 20407035	Check valve housing with suction and discharge check valves installed
3. Baseplate/mounting feet: 11028107	Baseplate w/rubber mounting feet

Exploded view

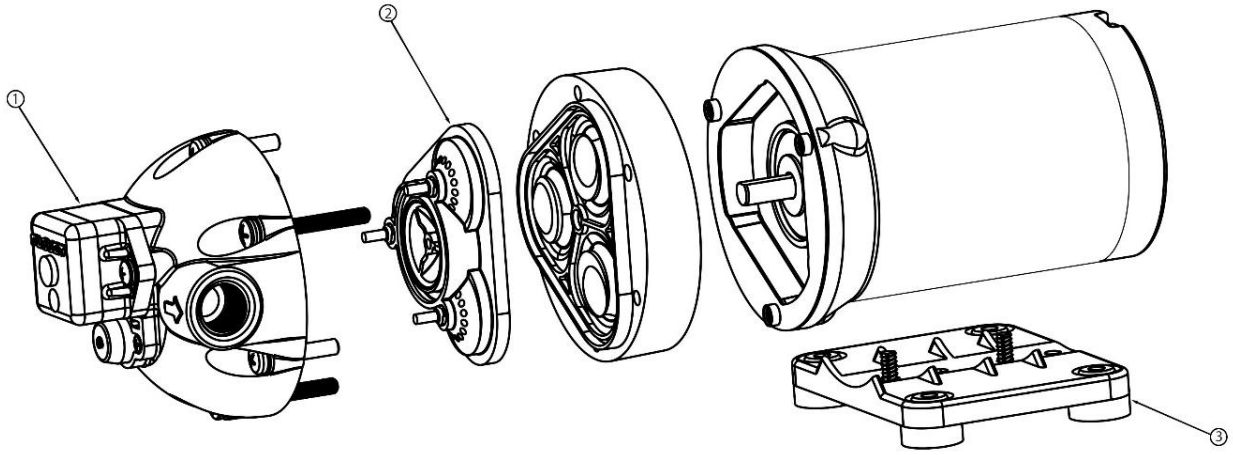

Available Flojet industrial options

In addition to the unit described in this datasheet Flojet also offers the following configurations (will vary somewhat by region and model type) and options:

Voltages:	12, 24, & 36 VDC 115 VAC
Flowrate range:	1 - 6 GPM (3.8 - 22.7 LPM)
Switch setting range:	25 - 150 PSI (1.7 - 10.3 Bar)
Pump configurations:	• Switch; Bypass; Switch & Bypass; Switch, No Bypass; No Switch, No bypass • EP/PP and other blended diaphragm materials • EPDM, FKM, and other valve/seal materials • Some models available with transducers or vacuum switches • Various customer options dependent on volumes

Installation & operation

For guidance on proper installation and operation of this pump, as well as for any warnings or cautions involving use, please consult the appropriate IOM for the pump. Printed IOMs are supplied with the pumps and are also available online.

Resources & contact information

IOM:	On website; hard copies with pumps	Customer service:	Refer to contact info at our website
Warranty:	Information included in IOM	Website:	www.xylem.com/flojet

Note: Specifications provided for guidance only. We reserve the right to change specifications without prior notice.

© 2025 Xylem Inc. or its affiliate. All rights reserved. Flojet is a trademark of Xylem or one of its subsidiaries.
T202F-318S-1P Rev. A 09/2025